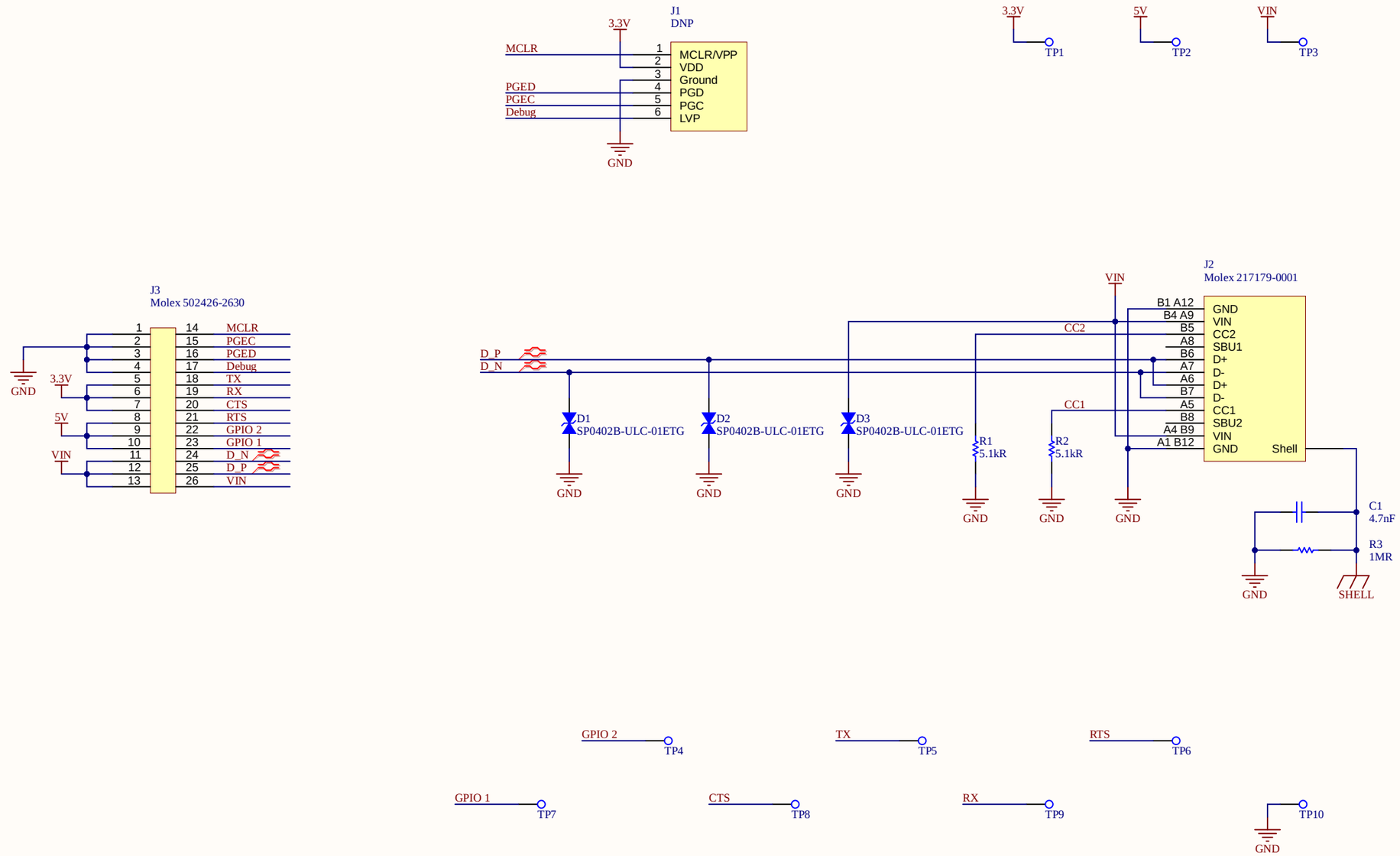


| | | | |
|---|---|---|---|
| TITLE | Twintig-USB.SchDoc | | |
| SIZE A3 | PROJECT Twintig USB | | VERSION v1.0 |
| VARIANT | [No Variations] | SHEET 1 | OF 1 |
| AUTHOR | Seb Madgwick | DATE | 12/17/2024 |

ICSP

J1

3V3

TP1

5V

TP2

VIN

TP3

C1

R3

R1

J3

D1

J2

D2

D3

R2

IO1

TP4

IO2

TP7

CTS

TP8

TX

TP5

RX

TP9

RTS

TP6

GND

TP10

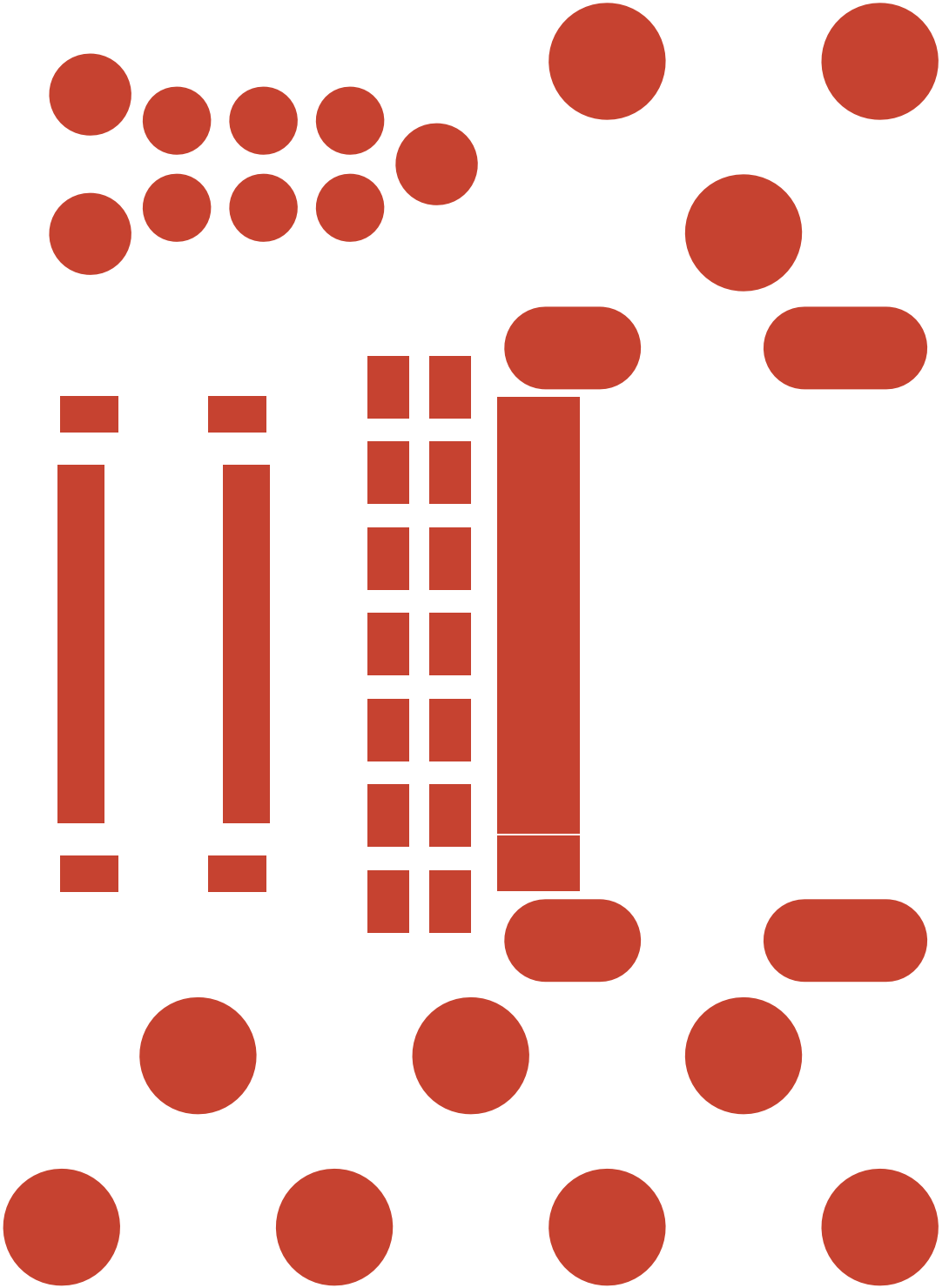

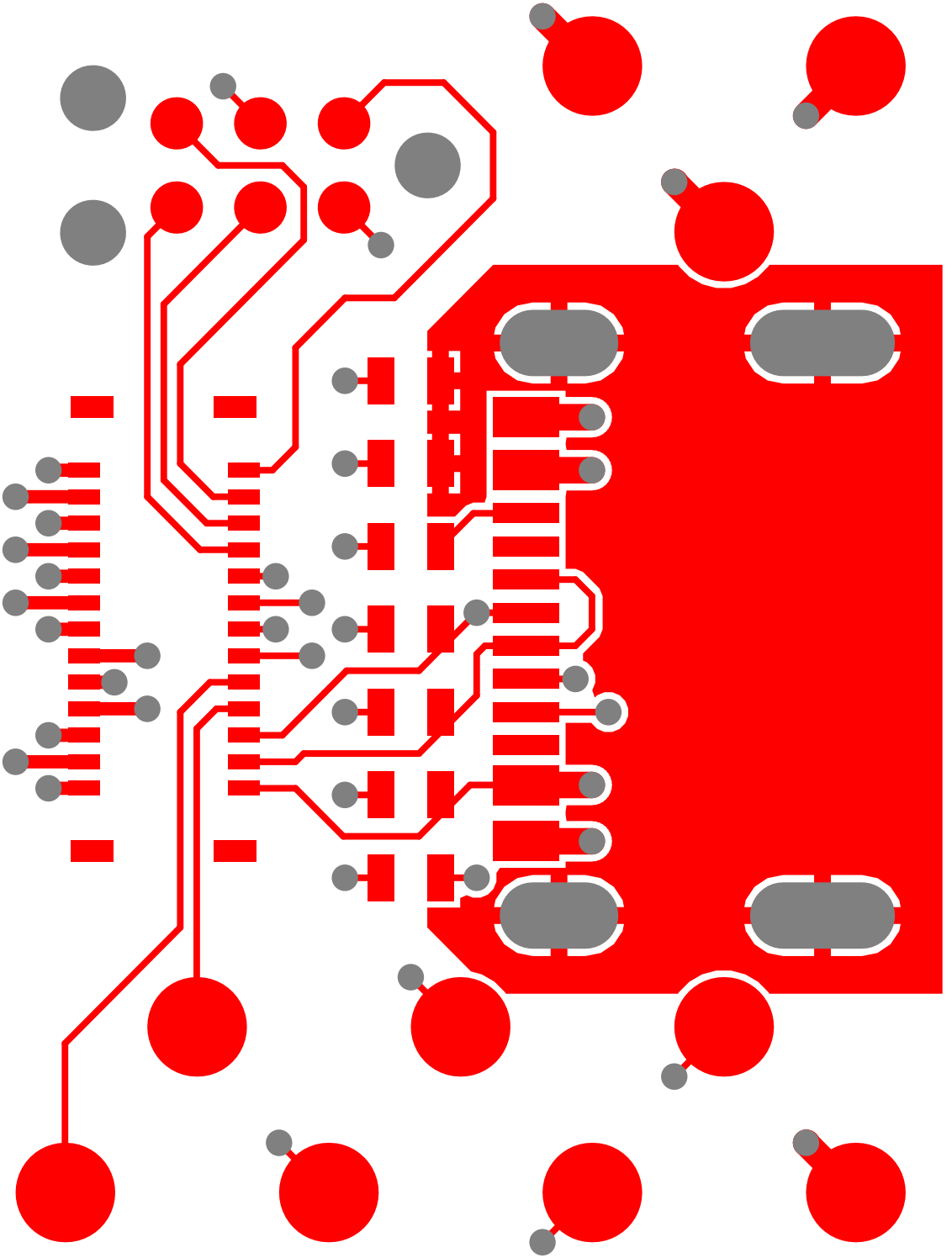

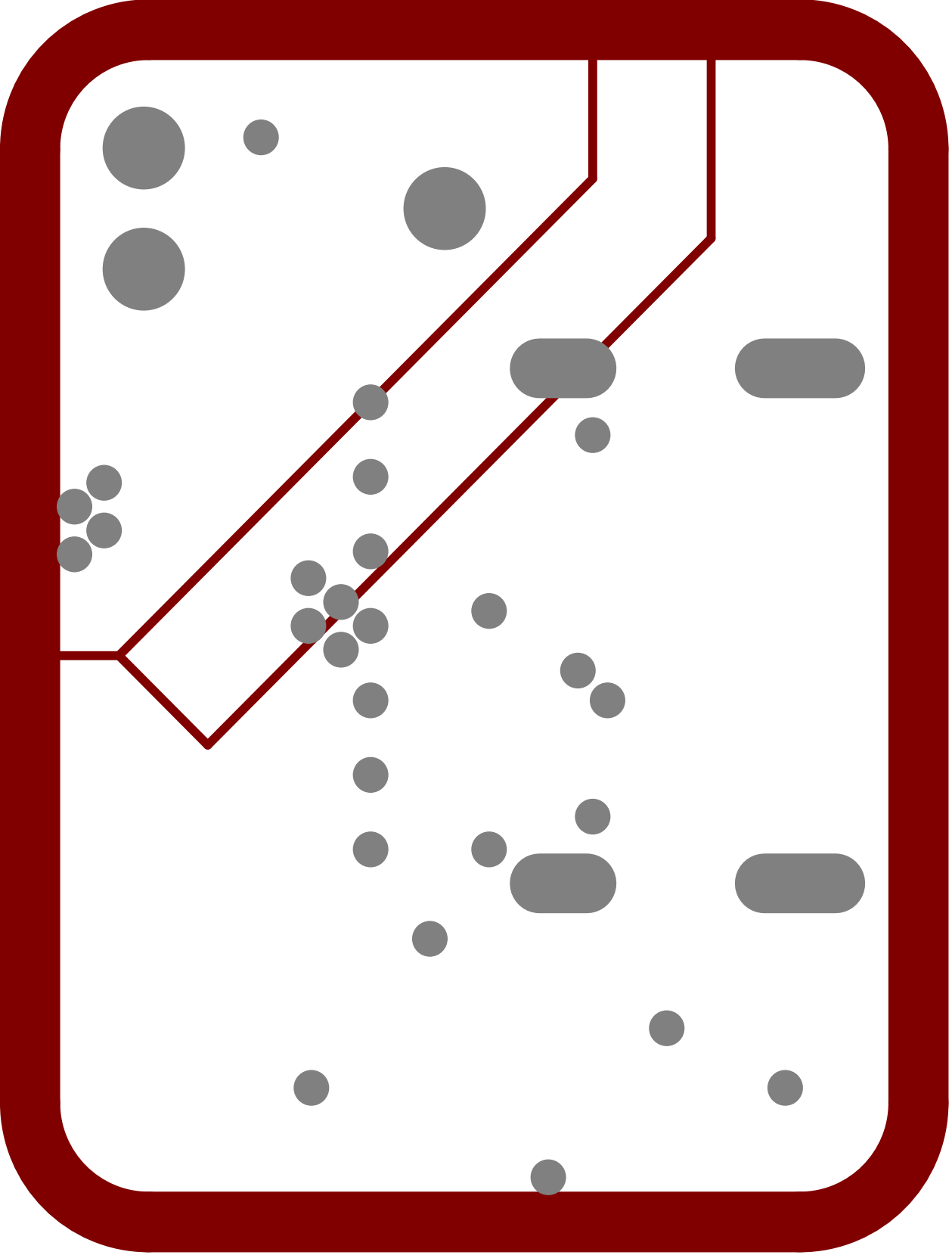

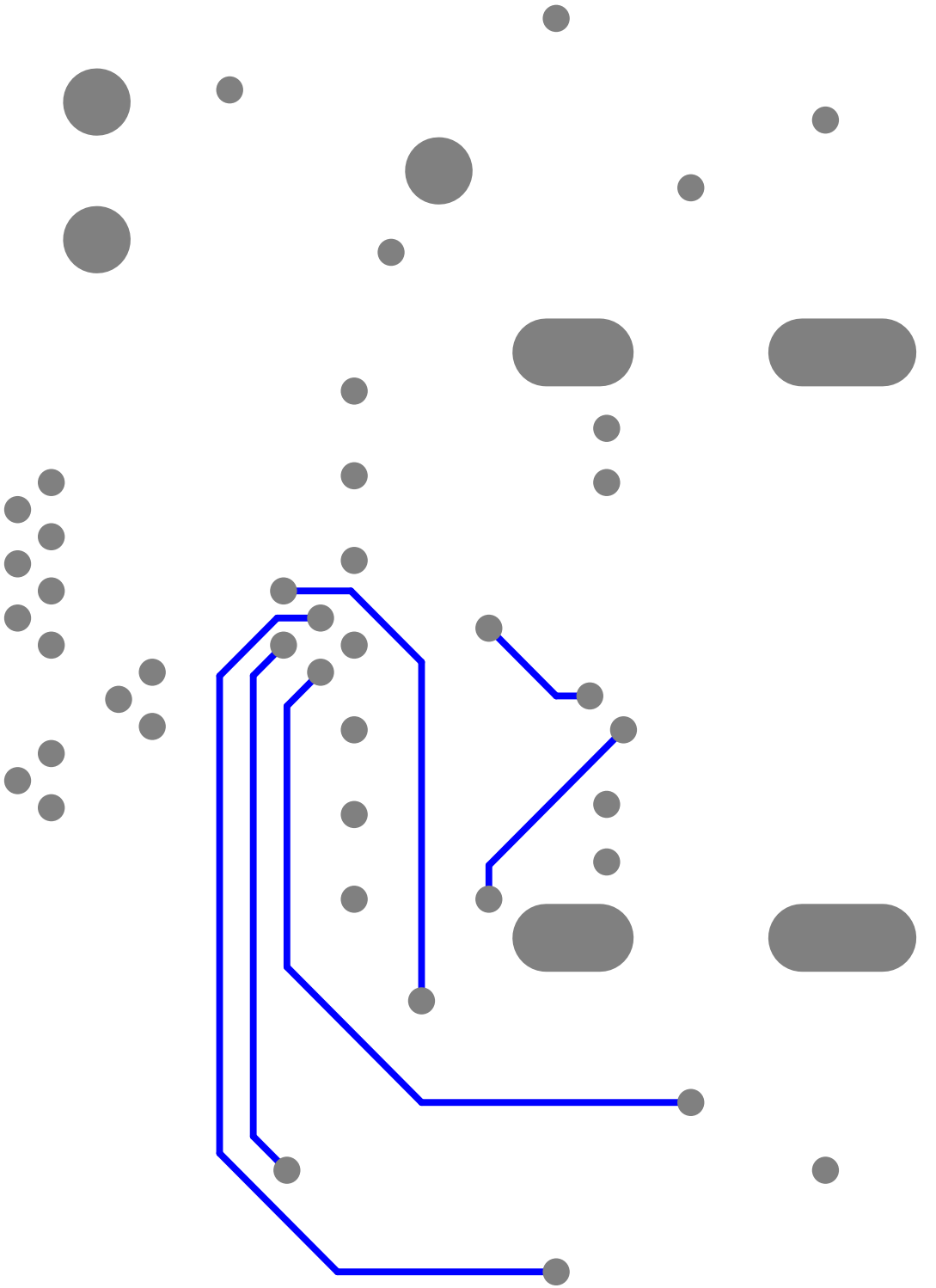

# Twinkly USB
# v1.0

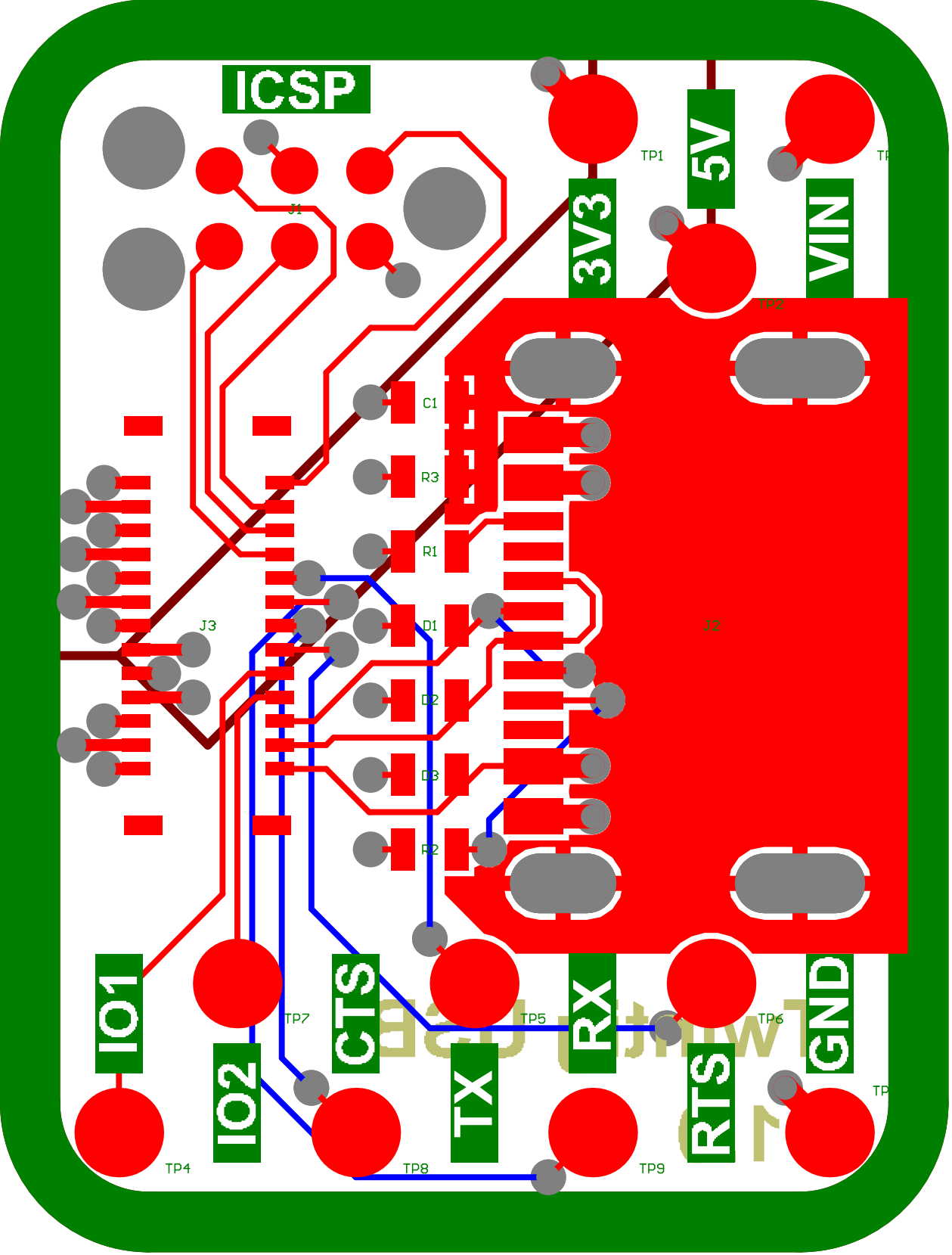
ICSP
J1
TP1
3V3
5V
VIN
TP2
C1
R3
R1
D1
D2
D3
R2
J3
J2
IO1
TP7
CTS
TP5
RX
TP6
GND
IO2
TX
RTS
TP4
TP8
TP9

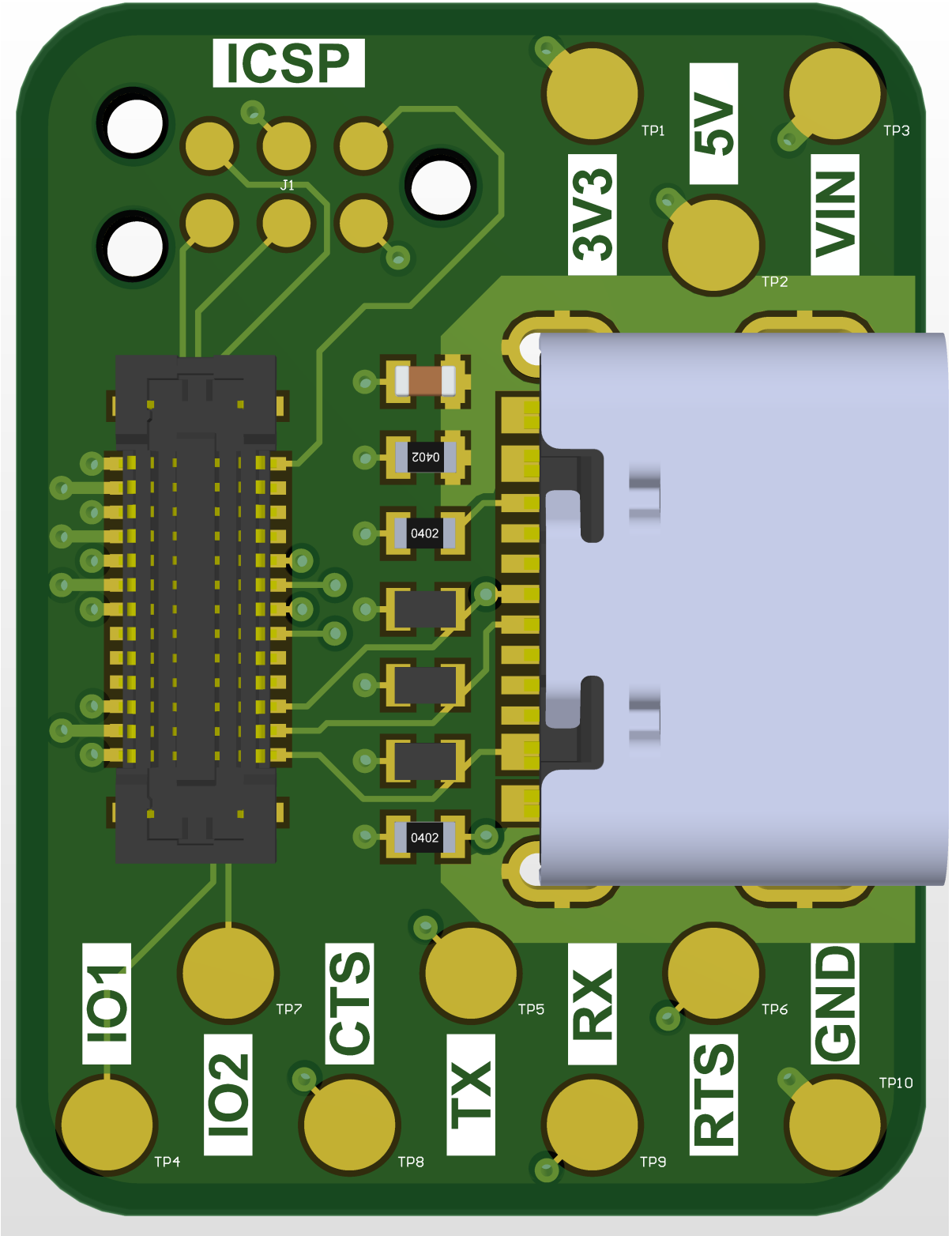
ICSP
J1
TP1
3V3
5V
TP2
TP3
VIN
0402
0402
0402
IO1
TP7
CTS
TP5
RX
TP6
GND
IO2
TX
RTS
TP10
TP4
TP8
TP9

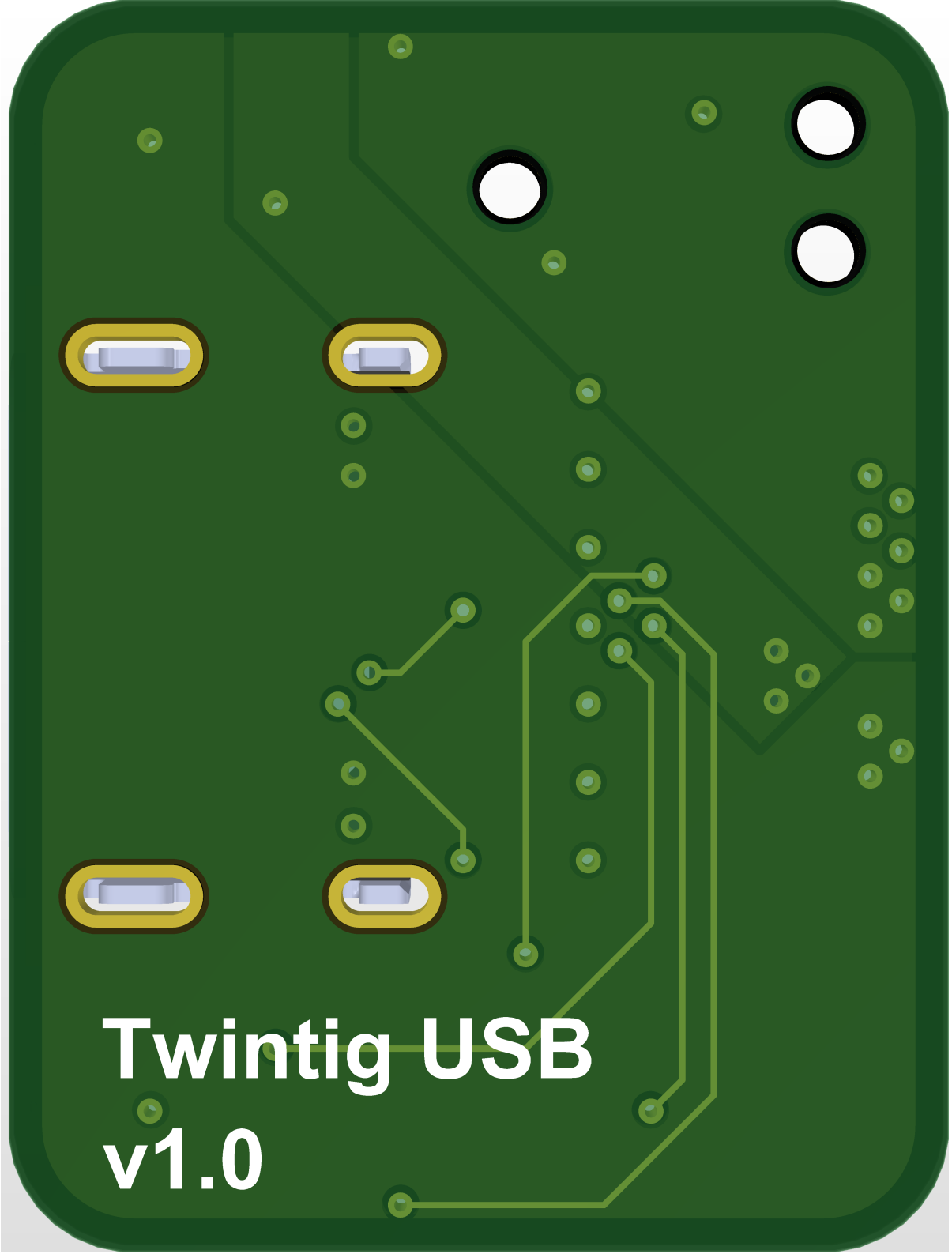
Twintig USB
v1.0

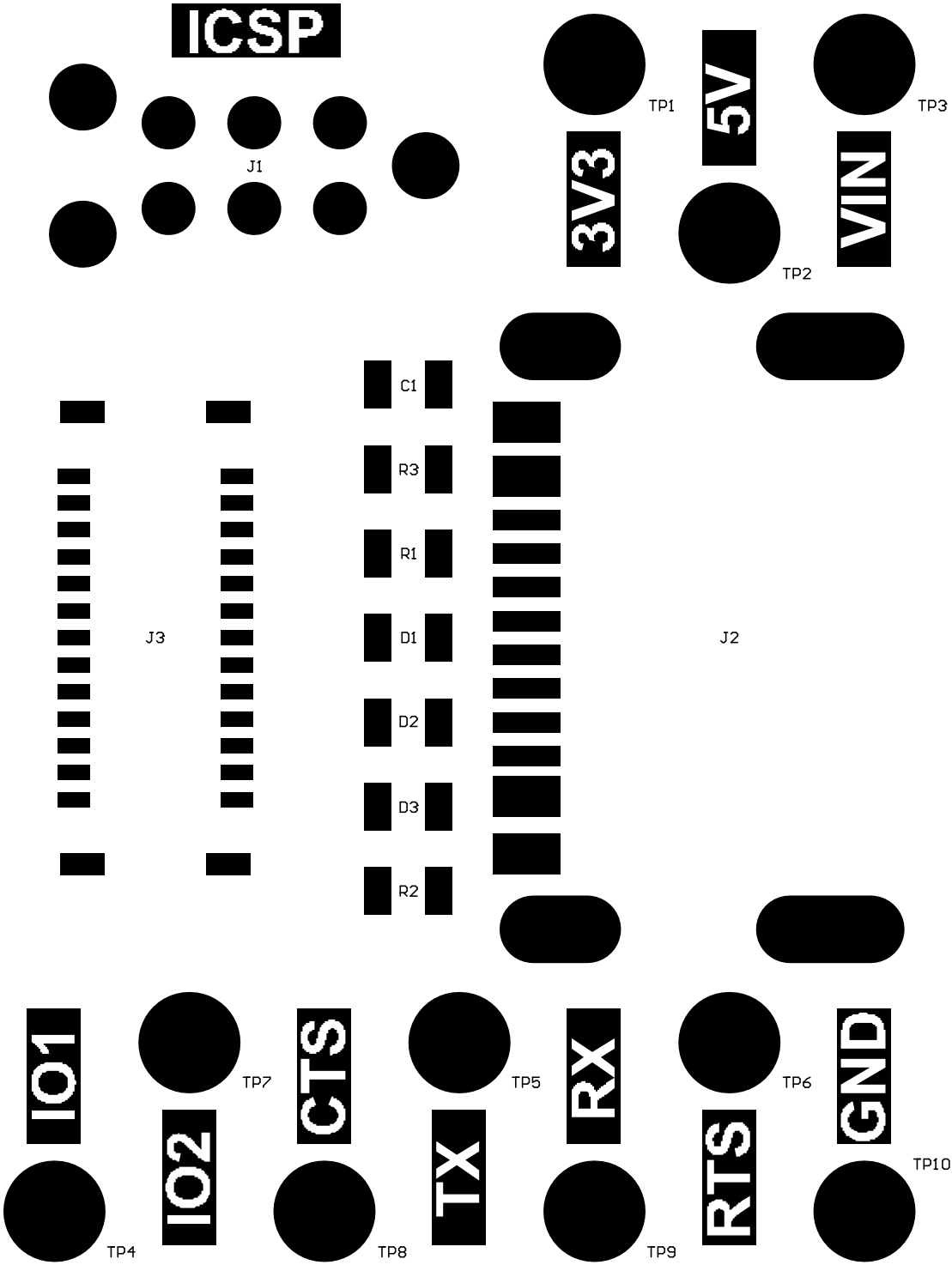
ICSP
J1
TP1
3V3
5V
TP2
TP3
VIN
C1
R3
R1
D1
D2
D3
R2
J3
J2
IO1
TP7
IO2
TP4
CTS
TP5
TX
TP8
RX
TP6
RTS
TP9
GND
TP10

# Twintig USB
# v1.0

| Designator | Quantity | Comment | Footprint |
|---|---|---|---|
| C1 | 1 | 4.7nF | Capacitor 0402 |
| D1, D2, D3 | 3 | SP0402B-ULC-01ETG | Diode TVS 0402 |
| J1 | 1 | DNP | Tag Connect No Legs |
| J2 | 1 | Molex 217179-0001 | Molex 217179-0001 |
| J3 | 1 | Molex 502426-2630 | Molex 502426-2630 |
| R1, R2 | 2 | 5.1kR | Resistor 0402 |
| R3 | 1 | 1MR | Resistor 0402 |
| TP1, TP2, TP3, TP4, TP5, TP6, TP7, TP8, TP9, TP10 | 10 | Test Point | Test Point 1.5mm |